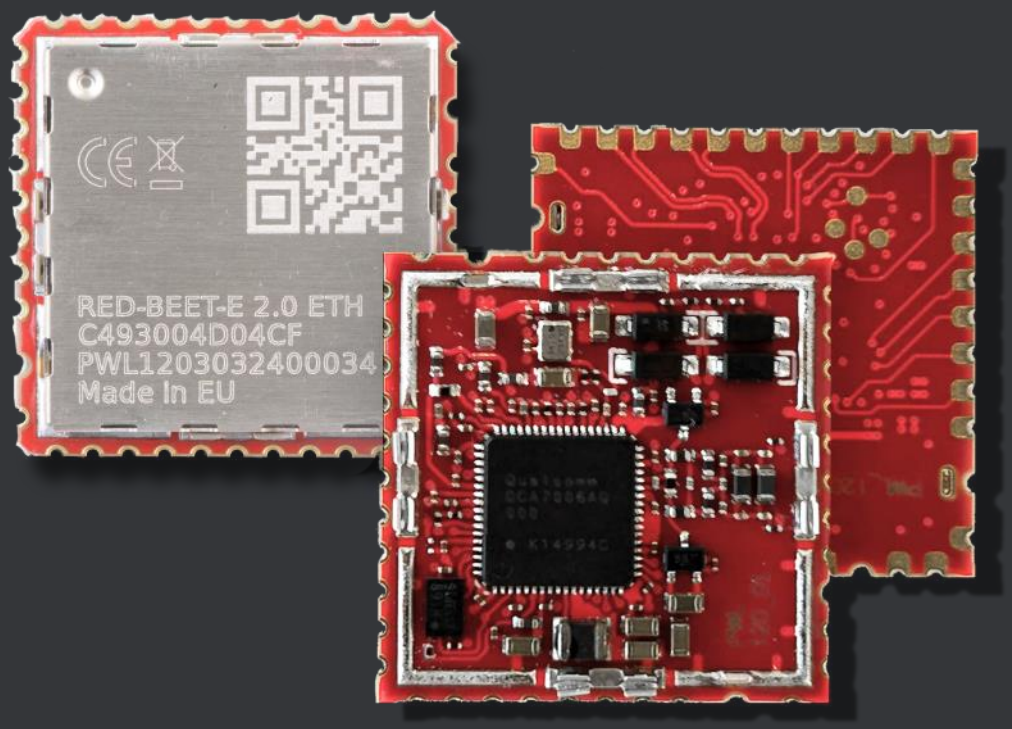

RED-BEET 2.0 is a universal powerline module based on the latest Qualcomm PLC chip QCA7006AQ which provides SPI and Ethernet interfaces with support of HomePlug GreenPHY standard as well as HomePlug AV for a higher datarate connectivity.

There are various versions of the module and despite primary focus on e-mobility (EVSE and PEV), it also could be used for other applications (e.g. IoT, short range communication applications.

All modules come with extended temperature range making it suitable even for high-end automotive applications.

**Available for purchase from CODICO GmbH*

Quick specs

- Based on QCA7006AQ with AEC-Q100 automotive qualification
- Extended industrial temperature range (up to 105 ºC)
- Ethernet, SPI and GPIO of QCA7006AQ for connecting host MCU
- Comes in 2 configurations for EV-charging applications: PEV (plug-in electric vehicle) and EVSE (electric vehicle supply equipment)
- SMD module with castellated pins on the edges for a better optical inspection during the soldering
- Small form factor (23 x 23 x 3.2 mm)

Table of Contents

1. Features 3

2. Block diagram 3

3. Operating conditions 4

4. Module pinout and pin description 5

5. Host interfaces 7

6. Coupling circuitries 10

7. References 11

8. Module marking information 12

9. Mechanical characteristics 13

10. Reflow profile information 15

11. Laminate conditions 16

12. Evaluation boards 17

13. Ordering information 18

14. Packaging 19

15. Document revision history 20

1. Features

TABLE 1-1. RED-BEET 2.0 FEATURES

	RED-BEET-E 2.0	RED-BEET-P 2.0
PLC chip	QCA7006AQ	
Firmware version	Qualcomm HomePlug GreenPHY FW v3.4	
Configuration (PIB)	EVSE (Electric vehicle charging stations)	PEV (Plug-in electric vehicles)
Host interface	SPI Ethernet (Integrated 10/100 802.3az Ethernet PHY)	
Power supply	3.3V	
Power consumption	1W (at 25º C)	
Max data rate	9.8 Mbps PHY rate / 4.6 Mbps payload with HPGP Firmware 200 Mbps PHY rate / 94 Mbps payload with HPAV Firmware	
Max distance	According to ISO/IEC 15118-3	
Temperature range	-40º C to +105º C (board temperature)	
Size	23.3 x 23.3 x 3.2 mm	
Weight	2.5 ±0.1 g	
Part number	RED-BEET-E 2.0	RED-BEET-P 2.0

2. Block diagram

FIGURE 2-1. RED-BEET 2.0 MODULE BLOCK DIAGRAM

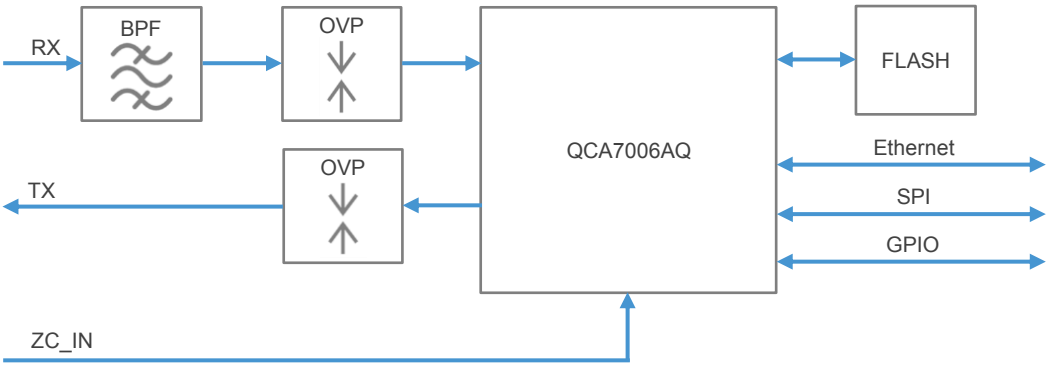

3. Operating conditions

TABLE 3-1. RECOMMENDED OPERATING CONDITIONS

Parameter		Min	Typical	Max	Units
VDD		3.13	3.3	3.46	V
SPI, Ethernet, GPIO	Low-level input voltage	-	-	0.8	V
	High-level input voltage	2.0	-	-	V
	Low-level output voltage	-	-	0.4	V
	High-level output voltage	2.4	-	-	V
Ambient temperature		-40	-	85	ºC

TABLE 3-2. ABSOLUTE MAXIMUM RATINGS

Parameter	Min	Typical	Max	Units
VDD, SPI, Ethernet, GPIO	-0.3	-	3.6	V
Operating temperature (board)	-40	-	95	ºC
Storage temperature	-40	-	150	ºC
RESETN active pulse duration	100	-	-	us

TABLE 3-3. RED-BEET 2.0 MODULE POWER CONSUMPTION (+25ºC AMBIENT TEMPERATURE)

Operation mode	Typical	Units
Transmit Mode	1000	mW
Receive Mode	700	mW
Idle Mode (no communication)	330	mW
RESETN Pin Active Mode	200	mW
Sleep Mode (power saving mode)	100	mW

NOTE: Operation at maximum temperature limit may increase power consumption up to 25%.
RED-BEET 2.0 power supply should have extra 25% power margin and be capable of providing power up to 1600 mW

TABLE 3-4. ZERO-CROSS DETECTOR INPUT SIGNAL SPECIFICATION

Parameter	Pin	Min	Typical	Max	Units
Zero-cross frequency	ZC_IN	48.4 57.7	50 60	51.6 62.3	Hz
Active high / low time	ZC_IN	0.4 0.4	10.0 8.3	19.6 16.2	ms
Rise / fall time	ZC_IN	0.001	-	-	ms
Offset from zero-crossing	ZC_IN	0 0	- -	20.0 16.6	ms
Peak to peak voltage	ZC_IN	0.1	0.25	3.3	V

NOTE: Zero-cross detector input signal has to have a nominal frequency of 50 or 60 Hz.

4. Module pinout and pin description

FIGURE 4-1. PIN ASSIGNMENTS (TOP VIEW)

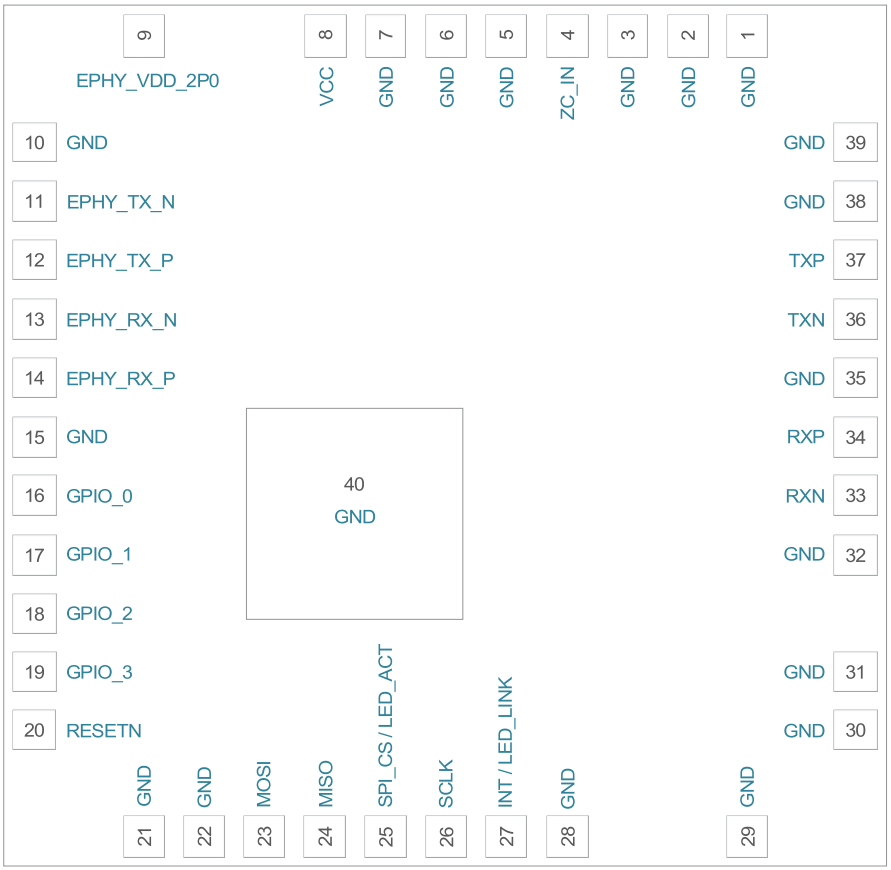

TABLE 4-1. PIN DESCRIPTION

Pin number	Name	Type	Description
1	GND	-	Ground
2	GND	-	Ground
3	GND	-	Ground
4	ZC_IN	I	Zero-cross detector input (analog, refer to TABLE 3-4) at EVSE side it is mandatory to provide Zero-cross signal at side EV ZC_IN has to be connected to GND
5	GND	-	Ground
6	GND	-	Ground
7	GND	-	Ground
8	VCC	-	3.3V power supply
9	EPHY_VDD_2P0	-	2.0V for Embedded Ethernet PHY
10	GND	-	Ground
11	EPHY_TX_N	O	Embedded Ethernet PHY Tx differential pair negative
12	EPHY_TX_P	O	Embedded Ethernet PHY Tx differential pair positive
13	EPHY_RX_N	I	Embedded Ethernet PHY Rx differential pair negative
14	EPHY_RX_P	I	Embedded Ethernet PHY Rx differential pair positive

TABLE 4-1. PIN DESCRIPTION (CONTINUATION)

Pin number	RED-BEET 2.0	Type	Description
15	GND	-	Ground
16	GPIO_0	I/O	Pull-up on the module internal (10k Ohm) *Bootstrap setting:* boot from Flash
17	GPIO_1	I/O	Output with weak internal pull-up (min. 75k Ohm) *Bootstrap setting:* Ethernet host interface (Ethernet/SPI)
18	GPIO_2	I/O	Pull-up on the module internal (10k Ohm) *Bootstrap setting:* SPI burst mode (when SPI is selected)
19	GPIO_3	I/O	Input with weak internal pull-down (min. 75k Ohm)
20	RESETN	I	Reset (active low)
21	GND	-	Ground
22	GND	-	Ground
23	MOSI	I	Ground
24	MISO	O	Ground
25	CS / GPIO_6 (ETH LED_ACT)	I/O	*SPI:* CS / *Ethernet:* LED_ACT (Rx and Tx activity indicator)
26	SCLK	I	*SPI:* CLK / *Ethernet:* -
27	INT / GPIO_4 (ETH LED_LINK)	O	*SPI:* INT (interrupt) / *Ethernet:* LED_LINK (Link up indicator)
28	GND	-	Ground
29	GND	-	Ground
30	GND	-	Ground
31	GND	-	Ground
32	GND	-	Ground
33	RXN	I	Powerline receive input negative
34	RXP	I	Powerline receive input positive
35	GND	-	Ground
36	TXN	O	Powerline transmit input negative
37	TXP	O	Powerline transmit input positive
38	GND	-	Ground
39	GND	-	Ground
40	GND	-	Thermal pad (requires connection to GND plane)

NOTE: Thermal pad shall have a good connection to the GND plane to improve heat dissipation.
It is recommended to have 9 vias 0.3 mm in diameter (formed as a square of 3x3 vias) to the GND plain.

TABLE 4-2. BOOT STRAP GPIO CONFIGURATION

GPIO number	Function	PU (pull-up)	PD (pull-down)
GPIO_0	Boot source	Flash (default)	Host
GPIO_1	Host interface in bootloader mode (overruled with PIB settings)	Ethernet (default)	SPI slave
GPIO_2	SPI slave mode (not used for Ethernet)	Burst (default)	Legacy

NOTE: PU/PD internal resistors (10k Ohm) are placed on the RED-BEET 2.0 module.
To overrule internal settings place external resistor of 1k Ohm or less.
If you keep the default bootstrap settings you do not require to place resistors at the GPIO_0, GPIO_1, GPIO_2.
Boot strap configuration is read only during power up or hard reset.

5. Host interfaces

SPI

QCA7006AQ SPI slave port uses the standard 4-wire Motorola SPI protocol in Mode 3 (CPOL negative, CPHA negative), plus an interrupt pin (INT). The SPI slave port is used for loading the firmware into NOR Flash, booting from a Host MCU as well as for communication with a Host MCU.
QCA7006AQ maximum slave SPI clock frequency is 12 MHz. More details on SPI behavior, working modes and registers description could be found in the Application note QCA700x SPI device driver reference.

FIGURE 5-1. SPI BUS DIAGRAM

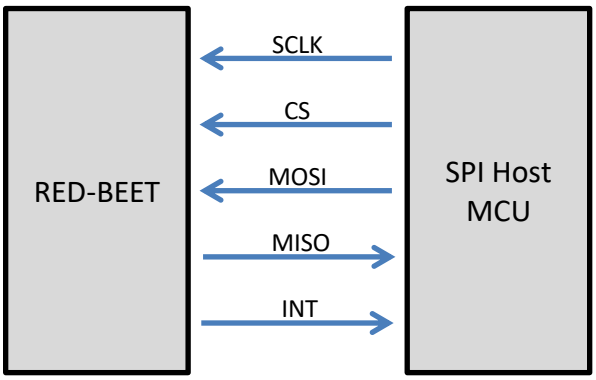

SPI slave interface timing requirements are shown in the Figure 4-2 and Table 4-1 below.

FIGURE 5-2. DATA TRANSFER REQUEST FROM SLAVE TO HOST INITIATED BY SLAVE INTERRUPT

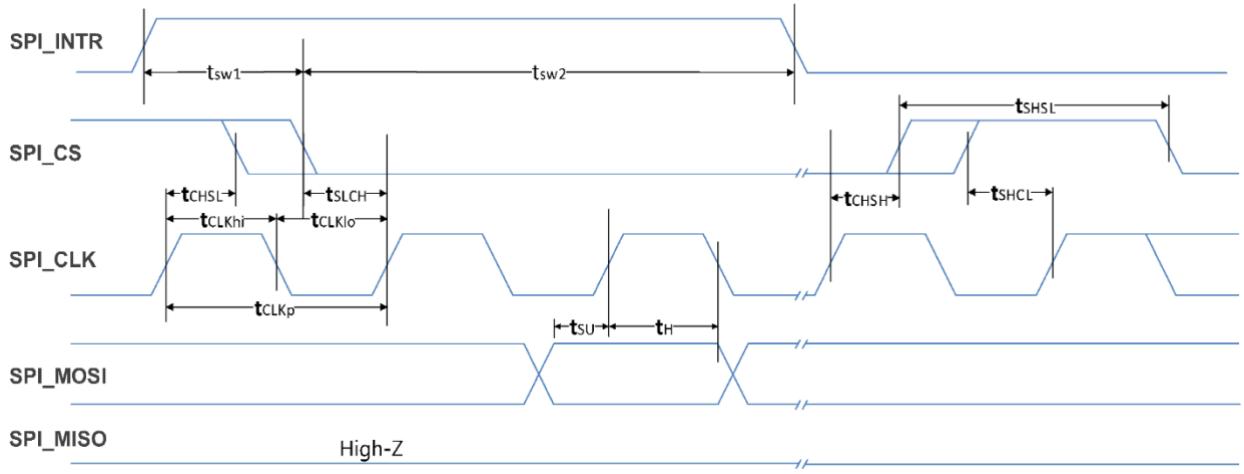

TABLE 5-1. SPI SLAVE TO HOST TIMING SPECIFICATIONS

Symbol	Parameter	Min	Max	Unit
t_{CLKp}	SPI Slave CLK Period	83.3	–	ns
t_{CLKhi}	SPI Slave CLK High Time	39	–	ns
t_{CLKlo}	SPI Slave CLK Low Time	39	–	ns
t_{SU}	Input Setup Time	–	5	ns
t_{H}	Input Hold Time	5	–	ns
t_{CHSL}	SPI Slave CLK high to chip select low	5	–	ns
t_{SLCH}	Chip select low to next SPI slave CLK high	5	–	ns
t_{CHSH}	SPI Slave CLK high to chip select high	5	–	ns
t_{SHCL}	Chip select low to SPI slave CLK high	5	–	ns
t_{SHSL}	Chip Select high to next chip select low	39	–	ns

Ethernet

RED-BEET 2.0 modules contain embedded fast Ethernet transceiver which supports full- or half-duplex connection, Auto MDI/MDIX feature and are fully compliant with IEEE 802.3/802.3u/ 802.3az.
A 10/100 Base-TX magnetics and RJ45 connector could be used with RED-BEET 2.0 modules.
For details of connection please refer to RED-BEET 2.0 reference design.

FIGURE 5-3. ETHERNET CONNECTION

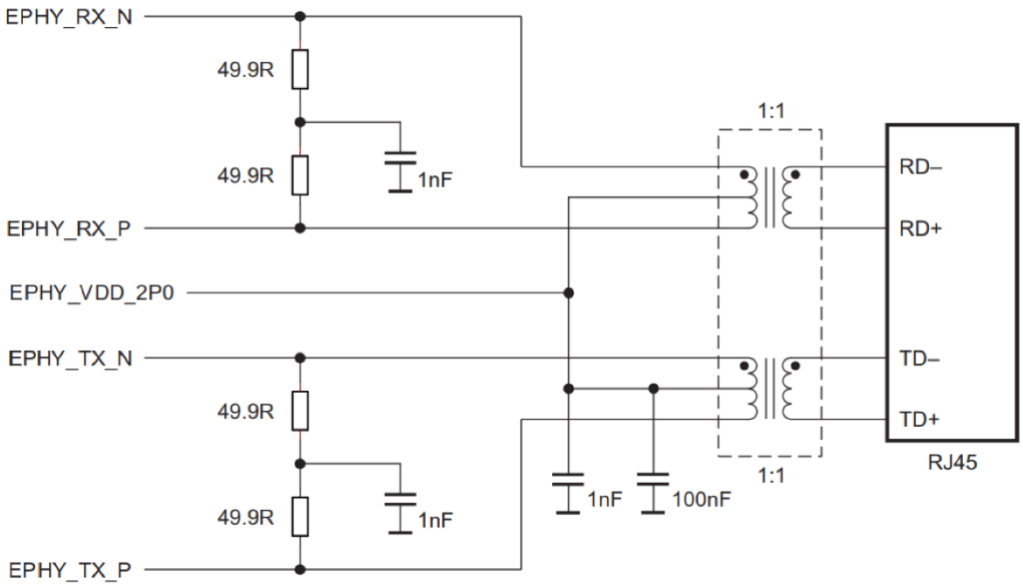

6. Coupling circuitries

The coupling circuit for **RED-BEET-E/-P 2.0** modules (Figures 6-1 and 6-2) is designed for use on CP/PE (Control Pilot / Protective Earth) in e-mobility applications.
PLC signal surge protection (3V rated TVS diode with 3pF junction capacitance) is shown on the schematic, but surge protection for CP for PWM 1kHz related circuit should be considered extra, it is highly recommended to use 12V rated TVS diode with junction capacitance less than 10pF (e.g. GBLC12C).

Recommended PLC transformer part numbers are:

PLC transformer	Turn ratio	Hi-pot test	AECQ-200
YT-61083-1	1:1:1	500V	yes
YT-35636	1:1:1	4kV	no
TMS61518CS	1:1:1	3kV	no
YT-37271	1:1	1kV	yes

FIGURE 6-1. RED-BEET-E/-P 2.0 CIRCUIT FOR COUPLER TO CP/PE

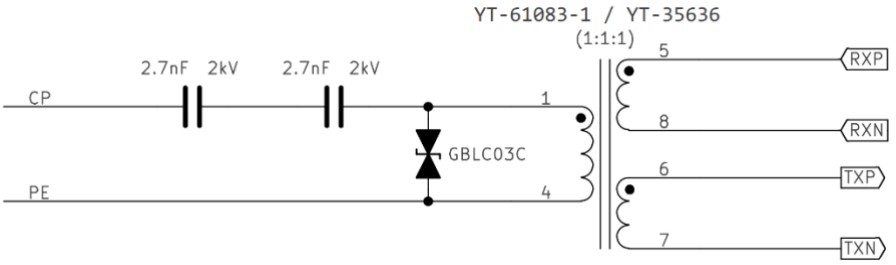

Alternative PLC transformer with 1:1 winding ratio

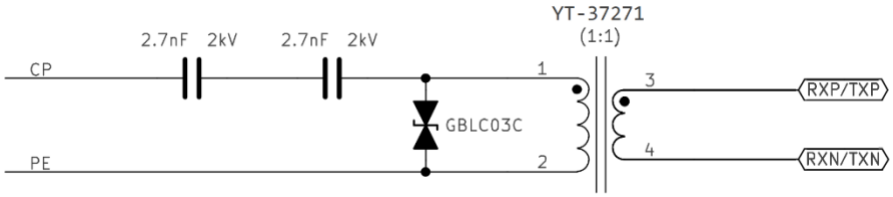

Use of zero-cross detection is mandatory in all type of EVSE applications according to ISO 15118 (including AC/DC/CCS charging stations). Zero-cross circuit for connecting to AC mains with voltage up to 250Vrms (RED-BEET-E 2.0) does not contain a circuit and surge protection, but it should be implemented extra (such as Varistor / MOV, Fuse, TVS diode).

There are 2 options for providing the Zero-cross detector input signal:

1. Using the circuitry shown on the FIGURE 6-2.
2. Providing a digital 3.3V logic signal that represents the Zero-cross signal of AC main. This signal has to be coupled with a 1nF serial capacitor to the ZC_IN pin.

FIGURE 6-2. RED-BEET-E/-P 2.0 CIRCUIT FOR ZC_IN

ZERO-CROSS INPUT FOR RED-BEET-E 2.0

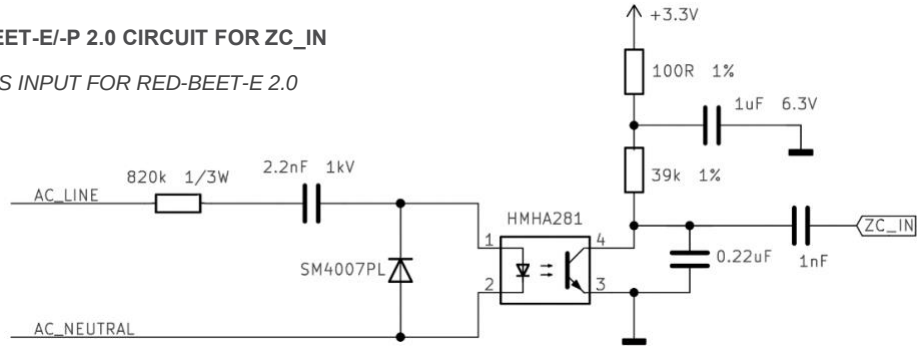

ZERO-CROSS INPUT FOR RED-BEET-P 2.0

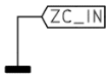

7. References

QCA7000/5 SPI driver is a part of Linux kernel since v3.18. QCA7000/5 driver forwards Ethernet frames between Ethernet and SPI interfaces using HAL drivers.

Various application notes, including the ones for SPI device driver, PIB (Parameter Information Block) configuration for different application, PSD calibration and Noise measurements, and other materials could be found on CODICO PLC documentation area:
https://downloads.codico.com/misc/plc

RED-BEET 2.0 module as HomePlug GreenPHY device can be configured and controlled using a set of command line tools open-plc-utilities. Source codes of open-plc-utilities and manuals can be found on Github repository:
https://github.com/qca/open-plc-utils

In the PLC Documentation Area https://downloads.codico.com/misc/plc the following software related Application Notes can be found:

AppNote_underNDA_QCA700x_SPI_device_driver_reference with details of QCA7006AQ slave SPI operation which are also helpful for development of own QCA7006AQ SPI driver.

AppNote_underNDA_QCA700x_PIB_config_for_EV_charging_applications with details of QCA7006AQ PIB file (Parameter Information Block) configuration.

AppNote_underNDA_PSD_Calibration_and_Noise_Measurement for EVSE and EV sides with mandatory procedure (by ISO15118-3) of calibration transmit power of HomePlug GreenPHY PLC equipment.

AppNote_norm_QCA700x_zero-cross_for_EVSE for more information regarding ZC input.

AppNote_underNDA_BEET_modules_design_guidelines for details of hardware design (including PCB layout).

8. Module marking information

Each module is marked using laser engraving and contains the following data:

1. Ordering code
2. QCA7006AQ MAC Address (contains no separator, OUI C4:93:00)
3. Serial Number in a format **PWL120VWWYYNNNNNN**, where:

   PWL120 – product code for RED-BEET 2.0

   V – HW version of the module

   WWYY – date code as a calendar week of production followed by a year

   NNNNNN – serial number in a production lot
4. QR-code containing MAC Address
5. Additionally, each label contains position indication of pin 1

9. Mechanical characteristics

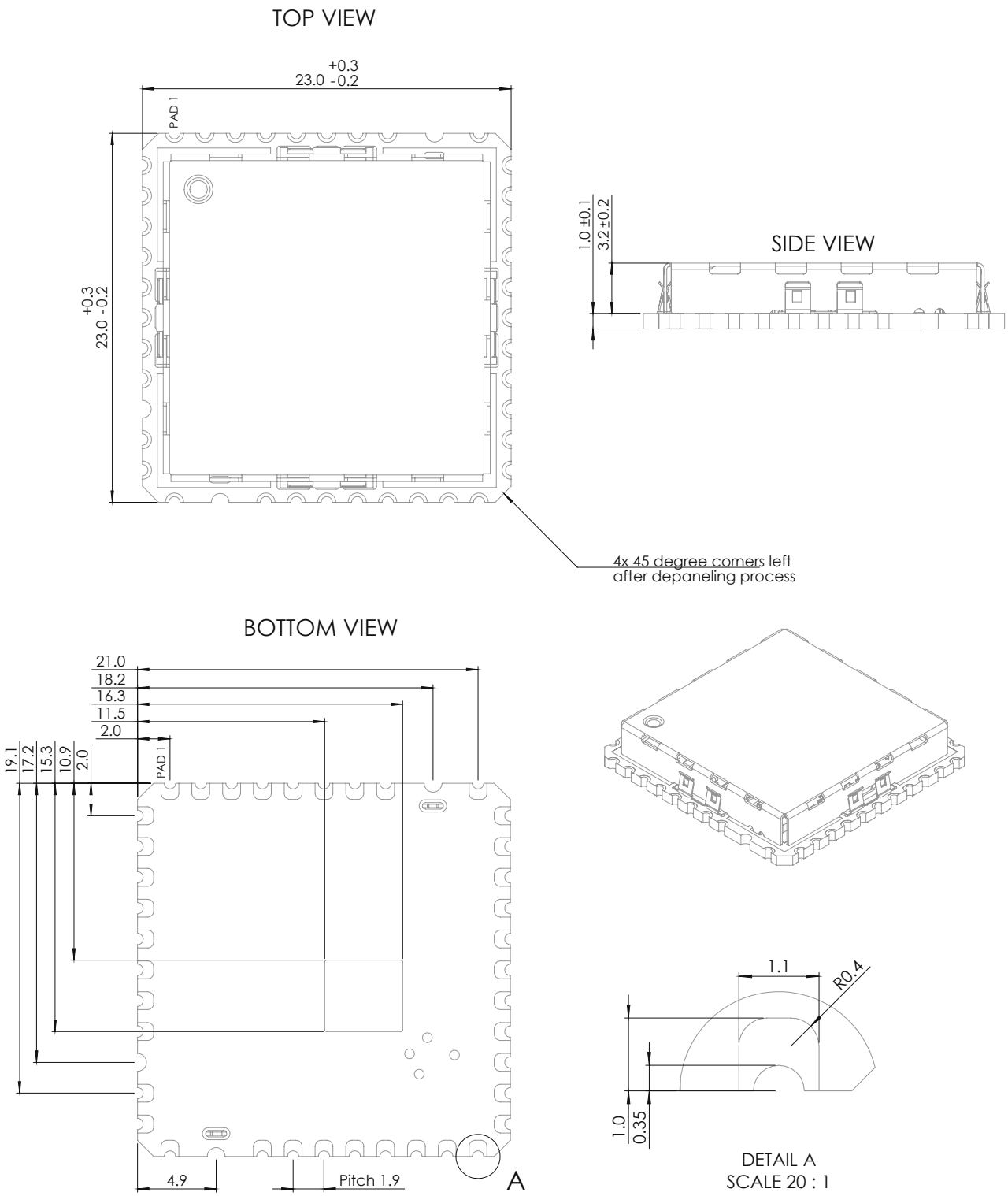

Drawings for the solder paste stencil and the PCB footprint

PCB footprint

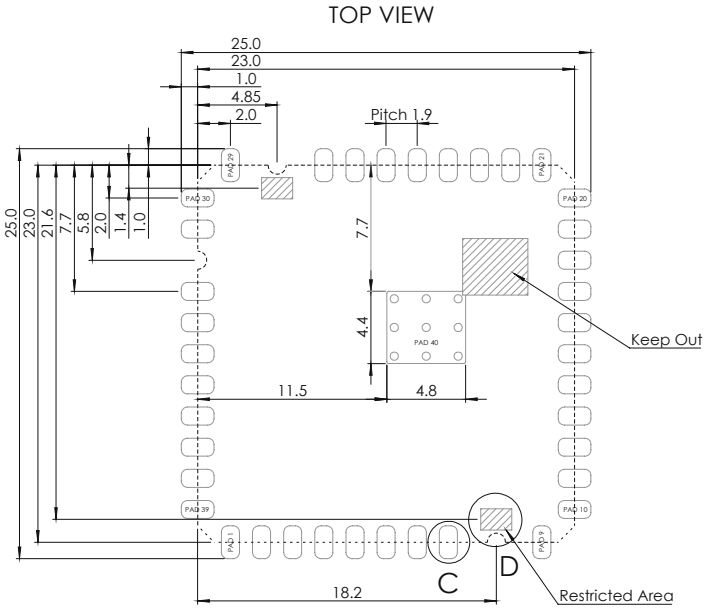

Soldering paste footprint

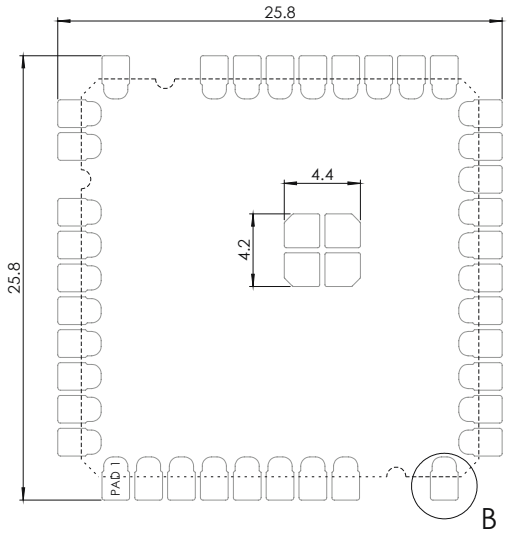

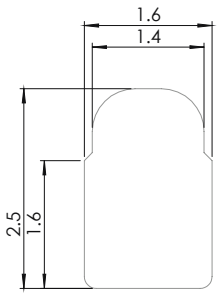

DETAIL B
SCALE 20 : 1

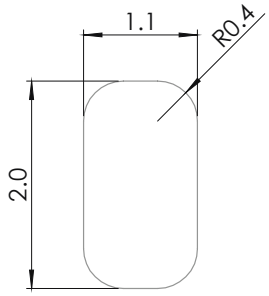

DETAIL C
SCALE 20 : 1

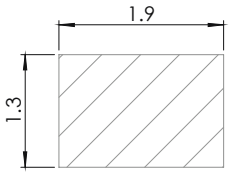

DETAIL D
SCALE 20 : 1

NOTE: Footprint and stencil drawing are only suggestions and dependent on the soldering process that is used at the manufacturer.

10. Reflow profile information

10.1 Reflow profile recommendation

Ramp up rate	3°C/second max
Maximum time maintained above 217°C	120 seconds
Peak temperature	250°C
Maximum time within 5°C of peak temperature	20 seconds
Cooling down (ramp down) rate	6°C/second max

Reflow profile

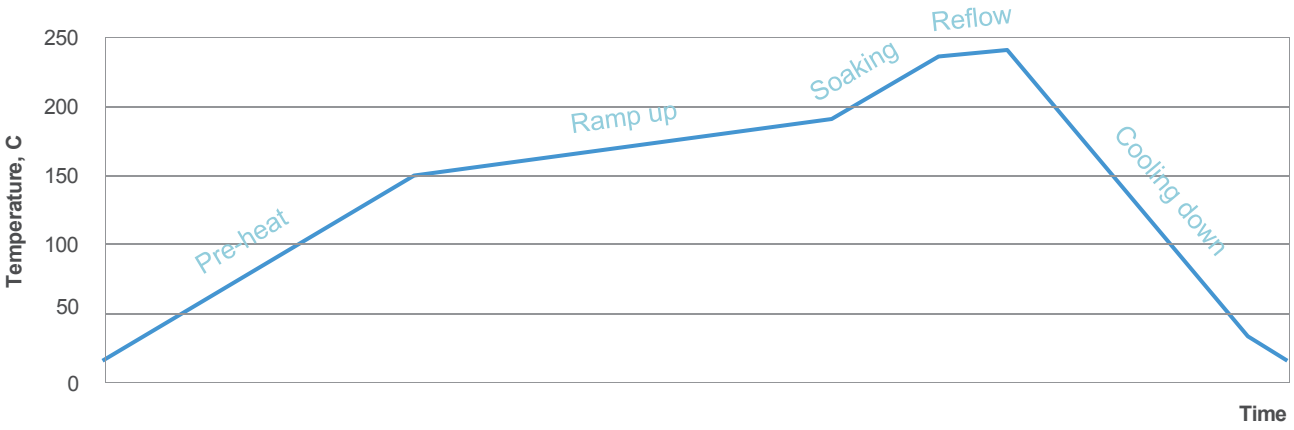

11. Laminate conditions

11.1 Bow and Twist

8devices modules are manufactured according to the standard IPC-A-610 Norm Class 2.
Standard states: “Bow/twist after solder should not exceed 1.5% for through-hole and 0.75% for surface mount printed board applications”.
According to this statement, the module can be bowed and twisted up to 0.354mm.
To avoid negative effects of bow and twist we recommend to increase the paste thickness for the module pads to achieve better co-planarity.

FIGURE 11.1 EXAMPLE OF BOW AND TWIST

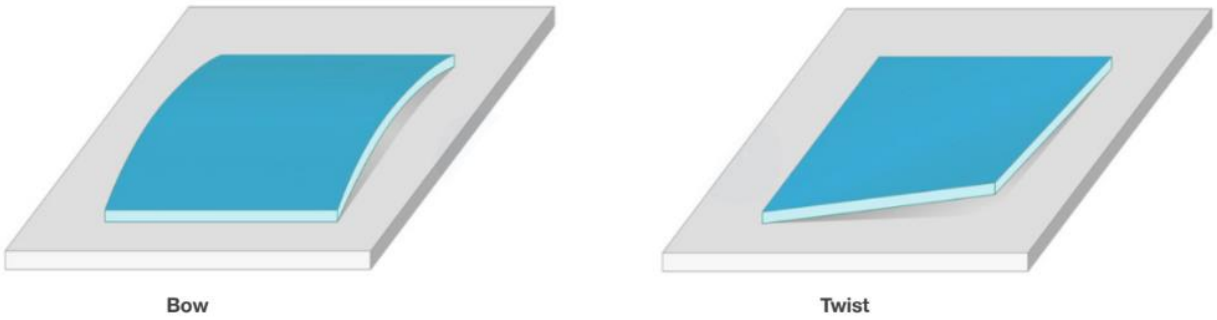

12. Evaluation board

In order to evaluate HomePlug GreenPHY PLC technology and RED-BEET 2.0 modules operation in particular, there is the evaluation board **RED-BEET-EVAL-BOARD 2.0** coming with 2 different automotive configurations (EVSE and PEV sides)
The board comes with line coupling for EV-charging applications. A standard 20-pin header connector is available for connection to an external MCU via Ethernet and SPI. For more details, please refer to RED-BEET-EVAL-BOARD 2.0 datasheet.

FIGURE 12-1. RED-BEET-EVAL-BOARD 2.0

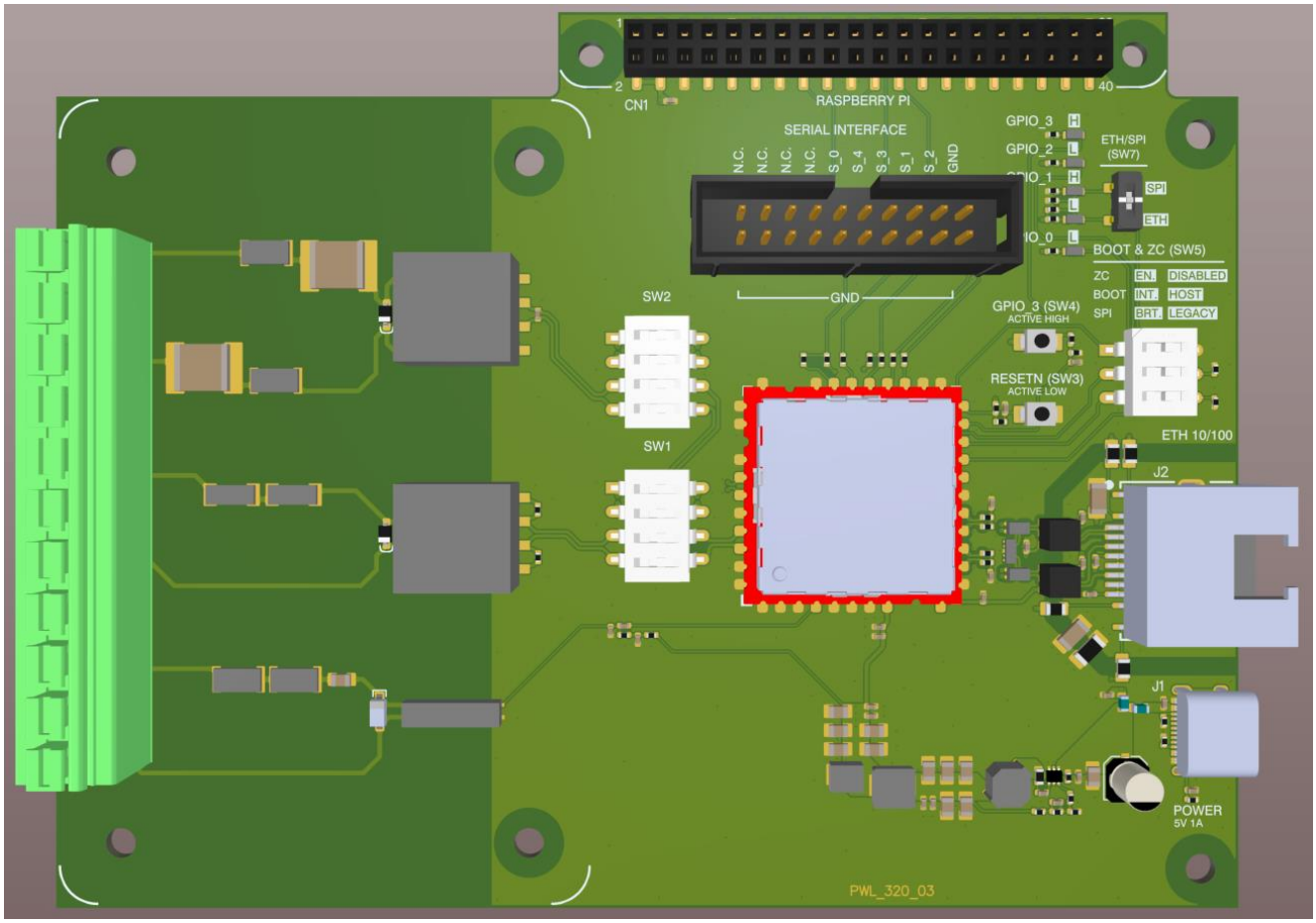

13. Ordering information

TABLE 13-1. ORDERING PART NUMBERS

Part number	Description
RED-BEET-E 2.0 SPI #317986	RED-BEET 2.0 module for EVSE (Electric vehicle supply equipment), HomePlug GreenPHY FW, SPI
RED-BEET-E 2.0 ETH #321059	RED-BEET 2.0 module for EVSE (Electric vehicle supply equipment), HomePlug GreenPHY FW, Ethernet
RED-BEET-P 2.0 SPI #317987	RED-BEET 2.0 module for PEV (Plug-in electric vehicle), HomePlug GreenPHY FW, SPI
RED-BEET-P 2.0 ETH #321091	RED-BEET 2.0 module for PEV (Plug-in electric vehicle), HomePlug GreenPHY FW, Ethernet
RED-BEET-H 2.0 ETH #317988	RED-BEET 2.0 module for long-reach applications, HomePlug AV FW, Ethernet
RED-BEET-EVAL-BOARD-E 2.0 #320488	Evaluation board for development and testing with line coupling, Ethernet and SPI interfaces for external MCU with EVSE configuration, RED-BEET-E 2.0 ETH module
RED-BEET-EVAL-BOARD-P 2.0 #320489	Evaluation board for development and testing with line coupling, Ethernet and SPI interfaces for external MCU with PEV configuration, RED-BEET-P 2.0 ETH module
RED-BEET-EVAL-BOARD-H 2.0 #320490	Evaluation board for development and testing with line coupling, Ethernet and SPI interfaces for external MCU with PEV configuration, RED-BEET-H 2.0 ETH module

More PLC products configured for various applications can be found in the CODICO Sample Shop: https://www.codico.com/en/products/powerline-communication

14. Packaging

Tray packaging

When RED-BEET 2.0 modules are packed into trays each tray fits 54 modules.
Every 5 trays are vacuum sealed and one standard packing box contains 1350 modules.

FIGURE 14-1. RED-BEET 2.0 TRAY DIMENSIONS

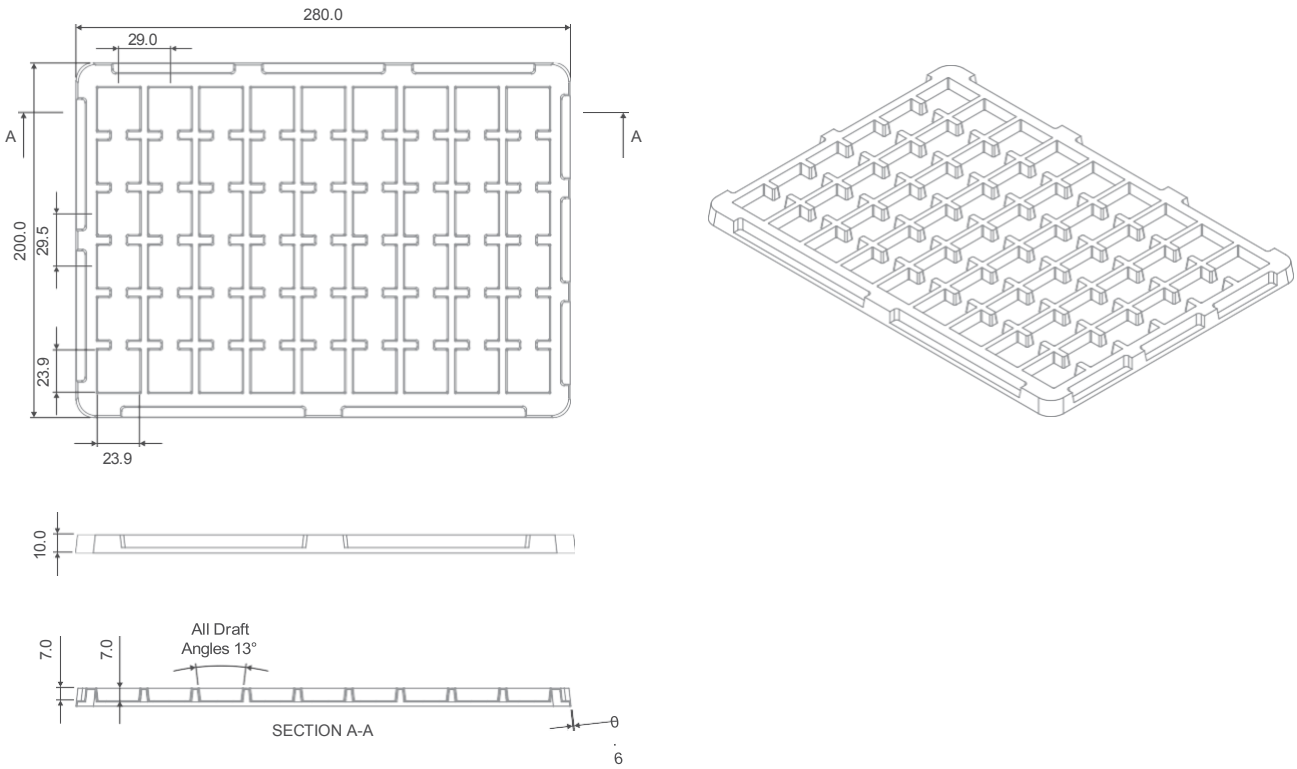

FIGURE 14-2. RED-BEET 2.0 STANDARD PACKING BOX DIMENSIONS

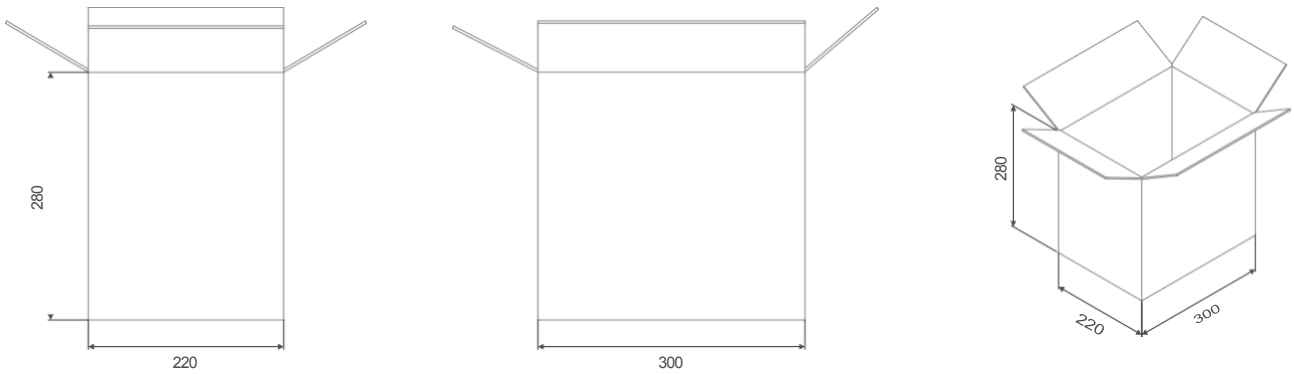

Tape&Reel packaging

When RED-BEET 2.0 modules are packed into Tape&Reel, each reel contains 400 modules. There are 5 reels in one standard packing box.
First 5 slots of every tape are empty, beginning of the tape on the FIGURE 13-3 is on the right side.

FIGURE 14-3. RED-BEET 2.0 CARRIER TAPE DIMENSIONS

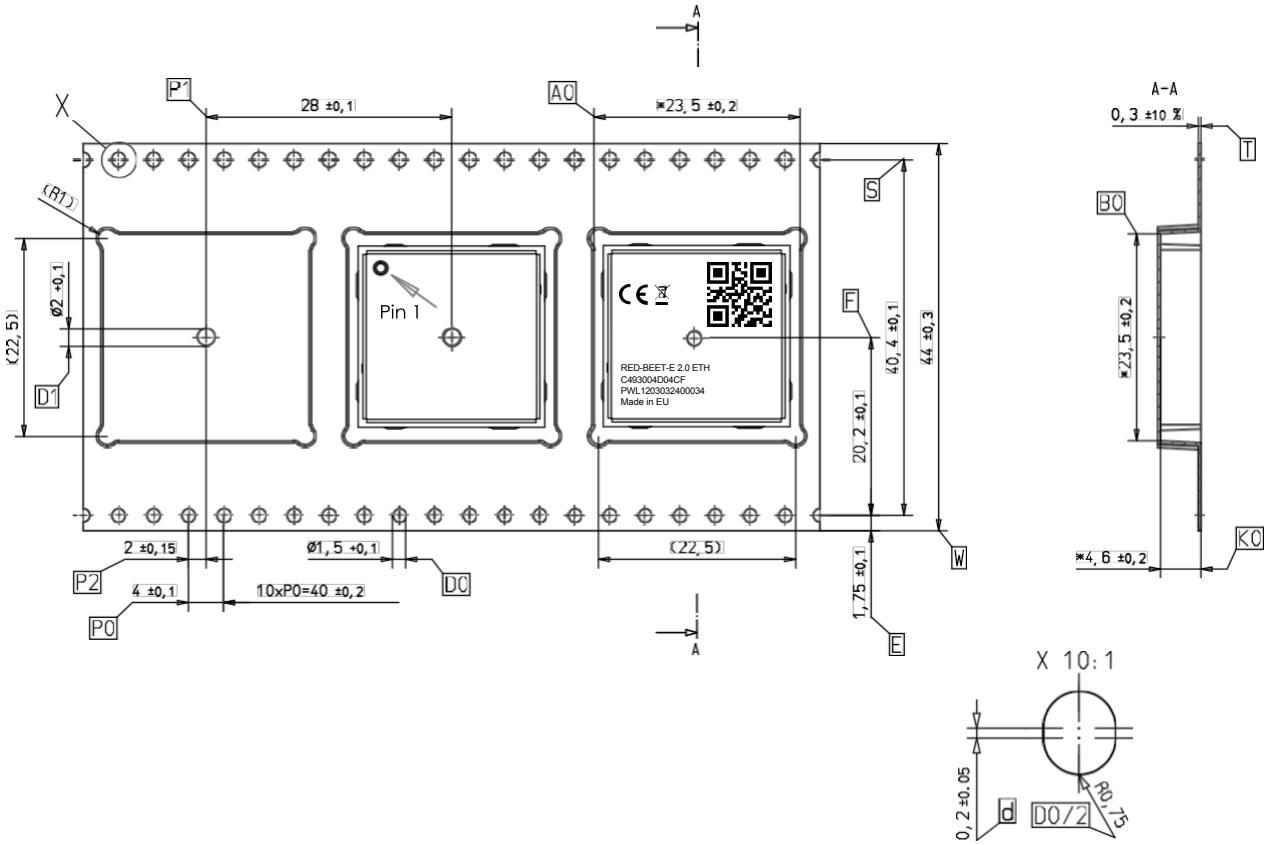

FIGURE 14-4. RED-BEET 2.0 PACKAGING REEL DIMENSIONS

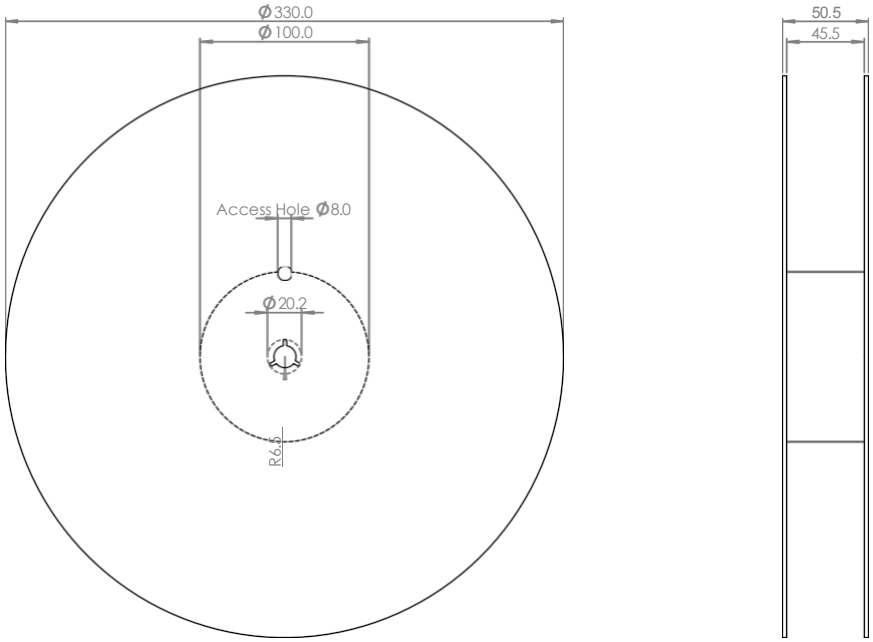

Unspecified tolerance			s: DIN ISO 2768-fH	
Tolerance			Position Tolerances	
Nominal			Straight holes and threads	
>	≤	+		
	6	0.1	⌖	0.2
6	30	0.2		
30	120	0.3	Countersunk holes	
120	315	0.4		
315	1000	0.6	⌖	0.1
1000	2000	1.0		

○ ⌀

FIGURE 14-5. RED BEET 2.0 REEL PACKAGING BOX WITH REEL

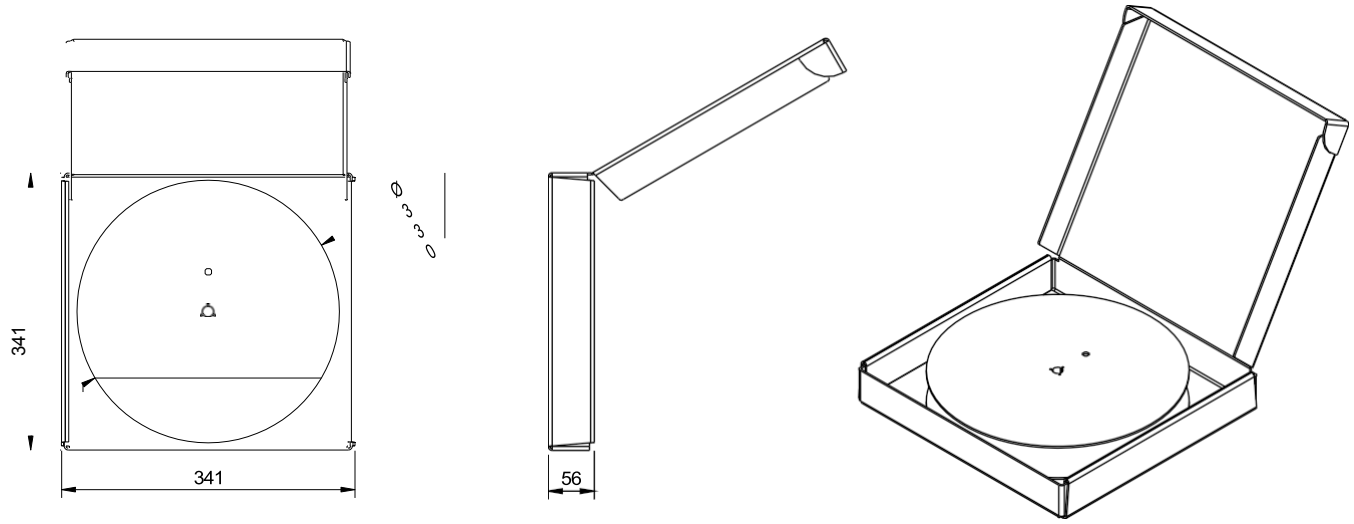

15. Document revision history

Revision	Revision Date	Description
1.00	2024.01.08	Initial release of the document
1.01	2024.01.15	Minor corrections, typos
1.02	2024.02.01	Laminate Conditions information added
1.03	2024.03.12	Module marking information updated
1.04	2024.04.02	Mechanical characteristics updated
1.05	2024.07.08	Detailed drawings of the module added
1.06	2024.11.28	Coupling circuitries updates
1.07	2025.02.27	Firmware version update
1.08	2026.09.07	Packaging options update

*** The confidential information is provided “as is”. The discloser makes no representations or warranties, express or implied, with respect to the information, and disclaims all warranties including, without limitation, the warranties of merchantability, and fitness for a particular purpose. ***